JVC®
PROFESSIONAL

3-CCD COLOR VIDEO CAMCORDER

GY-X3U

Full-featured 1/3″ 3-CCD, S-VHS Color Camcorder Delivering High Performance and Superior Operability

GY-X3U

3-CCD COLOR VIDEO CAMCORDER

To Create a Professional Image, You Have to Start with the Camera

Your customers know a professional quality video when they see it. It doesn't take a trained eye to spot crisp, bright pictures with strong and vivid colors. And the best-quality professional video images always start with a professional 3-CCD camera.

JVC's GY-X3U gives you the performance you've come to expect from a high end 3-CCD camera: higher resolution, better sensitivity, lower noise and more natural color reproduction — but without a hefty price tag. Its performance is dramatically superior to any single-CCD camera and rivals that of cameras costing thousands more.

Yet, for all of its power and sophistication, the GY-X3U is remarkably easy to use. Automated camera functions, pioneered by JVC, leave you free to point and shoot, even in the most difficult situations. And best of all, the GY-X3U is priced within the reach of more users than ever. And with it comes the image of a true professional.

- **3-CCD: High sensitivity three 1/3" CCDs deliver F8 at 2,000 lux.**
- **Low Light Performance: In the Maximum Gain Mode, the GY-X3U delivers great pictures at illumination levels as low as 4 lux.**
- **Full-size Head Drum: A built-in professional S-VHS VTR with full-size head drum gives top-quality recordings for up to 2 hours, using an ST-120 cassette.**
- **Low Noise Pictures: Newly designed 1/3" CCDs supported by advanced electronics achieve an excellent signal-to-noise ratio of 60dB.**

Superior Performance

3-CCD

The GY-X3U features three individual CCD pickups, one for each primary color with a prism beam splitter. This arrangement avoids the compromises inherent in a one-CCD system, providing good resolution and natural color reproduction even at the lowest light levels. The newly developed high-density 1/3″ CCDs apply the latest technologies to deliver a horizontal resolution of 550 TV lines.

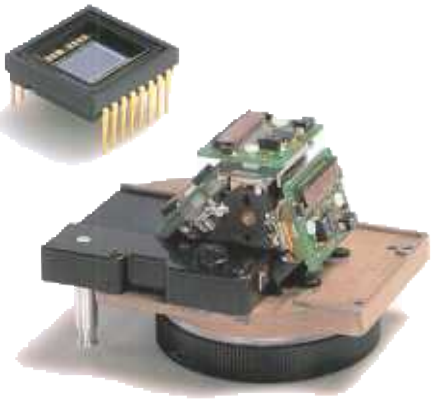

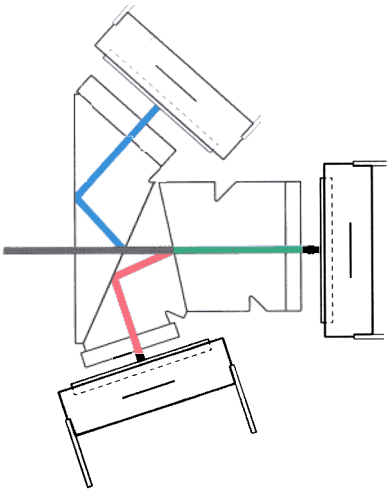

Full-size Head Drum

The advanced S-VHS mechanism in the GY-X3U uses a full-size professional VTR head drum for best interchangeability with other VTR's. This is especially important when editing. It also provides a smooth, stress-free tape path that minimizes jitters and eliminates any possibility of tape damage. Two Flying Erase Heads allow clean transitions when doing "in camera" editing. There is even an Insert Edit function that lets you replace previously recorded video with new material.

All Light Performance

With the GY-X3U, you're assured of professional results regardless of the amount of light on your subject. In low light, you can choose from a variety of gain settings up to +24dB with minimal increase in noise. You can even activate the Maximum Gain Mode with a single push button for shooting in near total darkness. You still achieve 100% video level in light as low as 4 lux, unprecedented for a camera in this price range. In bright daylight, with the Full Auto Shooting (FAS) mode selected, the Extended Electronic Iris (EEI) adjusts the shutter speed automatically without the need to change to the neutral density filter. An ND filter is provided if manual control of the function is desired.

NORMAL

MAX. GAIN

Low Noise Pictures

The signal-to-noise (S/N) ratio is a key parameter that indicates the noise content of a television signal. Noise can appear as distortions or snow in the recorded signal and is amplified when the tape is dubbed. The higher the S/N ratio, the less unwanted noise is included with the signal. The GY-X3U achieves a stunning 60dB S/N ratio, meaning that not only your original footage will look better, but so will the dubs you give to your customer.

Enhanced Operability

Automatic Level Control (ALC) — Shoot in darkened areas without changing settings

With ALC you can pan from a brightly lit to a dimly lit area in one take, without adjusting gain settings. The GY-X3U automatically detects and applies the correct amount of gain so you can concentrate on getting the shot. This feature is also very helpful when the lighting changes unexpectedly.

Full Time Auto White — Move from incandescent to fluorescent to outdoor lighting without changing white balance

The Full Time Auto White function analyzes the color temperature of a light source and continuously corrects for color temperature changes. In plain English, that means you could follow a bride from outdoor sunlight through a fluorescent lit hallway into a reception room and never have to adjust the white balance. This feature is also indispensable for shooting outdoor sunset weddings where the color temperature changes as the sun sets.

Extended Electronic Iris (EEI) allows continuous automatic shooting in all light levels

Working with ALC the EEI function provides a continuously variable shutter without using the special ND filters needed by ordinary cameras. That translates into continuous automatic point and shoot camera-work with smooth transitions from dark hallways to bright outdoor settings.

Full Auto Shooting (FAS) lets you concentrate on picture-perfect composition

Just flick a switch to enter the FAS mode and all of the camera's automatic functions are activated, allowing you to concentrate on the creative aspects of shooting. You're still in control of the zoom, focus and shooting trigger. This mode is especially important when something unexpected happens and you need to begin shooting immediately.

Easy-on-the-eye 1.5" viewfinder

The high-resolution electronic viewfinder is larger and brighter than those found on most camcorders, allowing you to see more detail, even when shooting in bright sunlight. Key parameters, including audio levels can be superimposed over the picture if desired. The display also lets you keep track of tape remaining, date & time, and battery condition.

Lightweight and Ergonomical

The GY-X3U was designed to be as comfortable as it is affordable. Weighing only 12.8 lbs. including lens and viewfinder, the GY-X3U is weight-balanced for exceptional stability. Its body is sculpted to ensure comfort during long periods of continuous shooting. All controls, including audio level adjustments, are right at your fingertips. The result is a camera that becomes an extension of your body — one that leaves you free to concentrate on the scene as you're shooting it.

Variable speed Fujinon 14x Servo Zoom lens adjusts to the action

The GY-X3U includes a powerful 14x professional servo zoom lens made by Fujinon. To adjust zoom speed, simply vary the finger pressure that you put on the rocker switch. Now you can create a much more natural effect than is possible with a typical power zoom, and reflect the mood of the moment. The lens also sports a motorized iris that smoothly adjusts to varying lighting conditions. Both the zoom and iris can be manually operated for additional control or special effects.

Advanced S-VHS recorder with CTL Time Code

JVC's S-VHS format has become the industrial worldwide standard for high quality, performance and reliability in both shooting and editing. The GY-X3U takes field recording to new heights with built-in CTL Time Code. Pioneered by JVC, this S-VHS time code writes absolute frame address data onto the control track of the tape. When played back in JVC's popular Edit-Desk system, the time code data is accessed assuring accurate logging and editing. To further enhance the editing process, the GY-X3U logs each new recorded scene in the "user bit" portion of the time code. This Scene Finder function lets you quickly locate the next or previous scene with the Edit-Desk system. Scene numbers are also displayed in the LCD display of the GY-X3U.

Other Easy-to-Use features

The GY-X3U offers many of the features provided only by top-of-the-line professional cameras. These include:

- Time/Date generator
- Variable Scan Mode for flicker-free shooting of CRT displays
- Auto Save Mode puts the VTR into power-save mode after long periods of inactivity
- Two-channel Hi-Fi audio recording (with separate inputs) in addition to liner audio track
- Camera-mounted microphone included
- Quick-release tripod adapter plate

Nomenclature and Functions of Major Parts

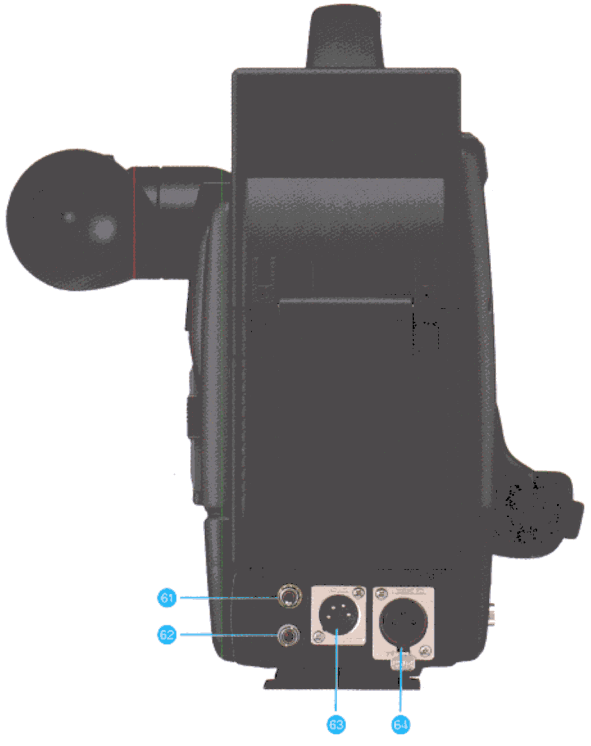

1. [FILTER] Optical filter knob
2. Viewfinder
3. Accessory mounting shoe
4. Carrying handle
5. Battery holder cover/lock release button
6. Battery holder
7. Zoom lens
8. Function box open/close lever
9. [AUX AUDIO REC LEVEL] External input recording level adjustment volume control
10. [MIC AUDIO REC LEVEL] Built-in microphone recording level adjustment volume control
11. [GAIN] Sensitivity select switch
12. [DISP. SEL] Display select switch
13. [POWER] Power switch
14. [VTR TRIGGER] VTR recording start/stop button
15. [IRIS] Iris compensation select switch
16. [MAX. GAIN] Max. gain button
17. [FAS] Full auto shooting on/off switch
18. [AUTO WHT.] Auto white balance adjustment start button/protection cover
19. [W. BLA] White balance select switch

LCD Display

20. [WARNING] Warning indication lamp
21. [COUNTER] Counter indicator
22. [LAP TIME] Lap time indicator
23. [CUT ID] Cut ID indicator
24. [T. REMAIN] Remaining tape time indicator
25. [AUTO OFF] Auto off indicator
26. [SERVO LOCK] Servo unlock indicator
27. [DEW] Dew indicator
28. [S-VHS] S-VHS indicator
29. [RESET] Reset button
30. [SELECT] Counter select button
31. [BATT] Battery capacity indicator
32. Audio level meter indicator
33. Counter display

Function Box

34. [REC/INSERT] Record/insert button
35. [FF] Fast-Forward/Search button
36. [PLAY] Play button
37. [REW] Rewind/Search button
38. [EJECT] Eject button
39. [STOP] Stop button
40. [PAUSE] Pause/Still button
41. [V-SCAN] Variable Scan on/off switch
42. [UP/ADJUST] Up/Adjust button
43. [DOWN/SHIFT] Down/Shift button
44. [MODE] Mode button
45. [SET] Set button
46. LED indicator
47. [S-VHS] S-VHS recording select switch
48. [SOURCE SELECT] Recording source select switch
49. [AUX REC LEVEL] External input recording level select switch
50. [AUX INPUT LEVEL] External input level select switch
51. [Hi-Fi REC] Hi-Fi recording on/off switch
52. [MIC REC LEVEL] Built-in microphone recording level select switch

---

53. Cassette holder
54. [MIC] External microphone input jack (monaural)
55. Built-in microphone
56. [VIDEO MONITOR] Video monitor output connector (BNC)
57. [TALLY] Tally on/off switch
58. Tally lamp
59. [CONT] Contrast adjustment device
60. [BRIGHT] Brightness adjustment device
61. [POWER SEL.] Power supply input select switch
62. [AUDIO MONITOR] Audio monitor output jack
63. [DC INPUT] DC input connector (4-pin)
64. [AUDIO INPUT] Audio input connector

Specifications

■ CAMERA SECTION
Image pickup device: 1/3" IT CCD × 3
Color separation system: F1.4, 3-color separation prism
Number of effective pixels: 510(H) × 492(V) pixels
Color system: NTSC (R-Y, B-Y encoder)
Optical filter: 3200K, 3200K+6.3% ND
Horizontal resolution: 550 TV lines
Sensitivity: F8, 2000 lux
Minimum illumination: 4 lux with F1.4 max. gain
S/N ratio: 60 dB (luminance signal)
Gain: 0 dB, 6 dB, ALC, 24 dB (MAX. GAIN)
Variable scan: 1/60 to 1/2000 sec.
Detail correction: Horizontal dual-edged, Vertical dual-edged
Microphone: Superdirectional electret condenser microphone
Viewfinder: 1.5" B&W viewfinder

■ VTR SECTION
Format: S-VHS standard
Tape speed: 33.35 mm/sec.
Record/playback time: 120 min. (with ST-120 cassette)
Horizontal resolution: 400 lines or more (S-VHS mode)
Video S/N ratio (color): 45 dB (playback VHS/S-VHS)
Audio S/N ratio: 44 dB

■ ZOOM LENS
Focal length: 5.5 to 77 mm (zoom ratio 14:1)
Max. aperture ratio: F/1.4
Focus range: 1.0 mm to ∞
Front thread diameter: 62 mm, P=0.75 mm
Iris range: F/1.4 to 16, close

■ INPUT/OUTPUT SIGNALS
Video signal output: VBS 1 V(p-p)/75 ohms (BNC)
Audio output (ϕ3.5 mini-jack): Ch1 (L): –10 dBs
: Ch2 (R): –10 dBs
Camera microphone input: –70 dBs (with the built-in microphone), 4.7k ohms unbalanced
Audio input: +4 dBs/10k ohms or –60 dBs/3k ohms (selectable) equivalent to XLR-3-32, balanced

■ GENERAL
Power requirement: 12V DC (10.5V to 18V permissible battery range)
Power consumption: 19.4W under REC/PAUSE mode conditions
Weight: 12.8 lbs (5.8 kg)
Operating temperature range: +32°F to 104°F (0°C to 40°C)
Storage temperature range: –4°F to +140°F (–20°C to +60°C)

■ PROVIDED ACCESSORY
Quick-release tripod adapter plate

Dimensions

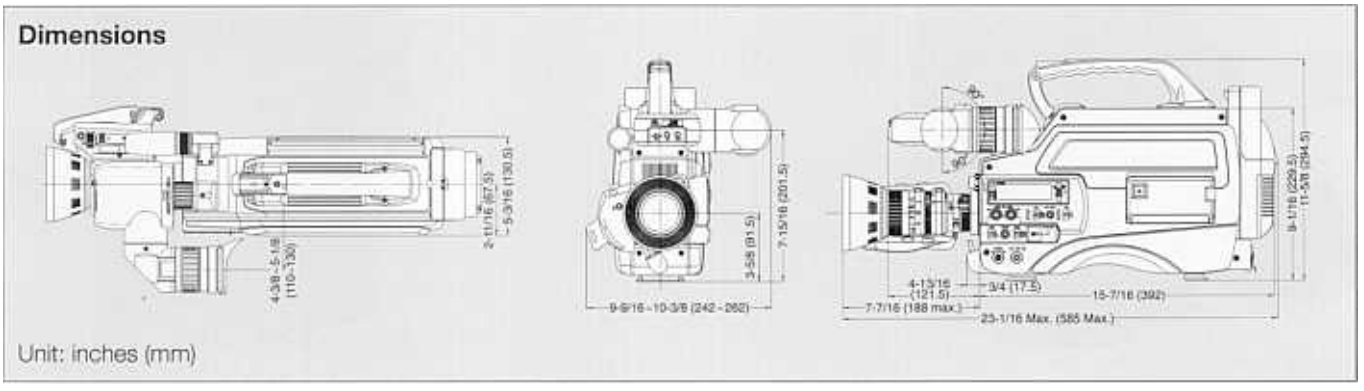

Unit: inches (mm)

Options & Accessories

AA-P250U
AC Power Adapter/Charger

AA-G10U
Battery Charger/AC Power Adapter

NB-G1U
Ni-Cd Battery (2.2 Ah)

CB-P27U Carrying Case
CB-27 Shipping Case (for U.S.A.)

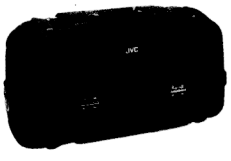

KA-A3U
Mic Holder

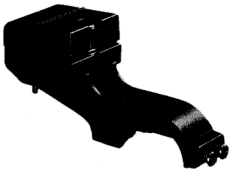

Design and specifications subject to change without notice.

DISTRIBUTED BY

JVC PROFESSIONAL PRODUCTS COMPANY
DIVISION OF US JVC CORP.
41 Slater Drive, Elmwood Park, N.J. 07407
TEL: (201) 794-3900, 1-800-526-5308
FAX: (201) 523-2077

JVC CANADA INC.
21 Finchdene Square, Scarborough, Ontario M1X 1A7
TEL: (416) 293-1311 FAX: (416) 293-8208
www.jvc.ca/jvc

Printed in Japan
KCN-1707